WASHER

Repair Parts List

MODEL NUMBER

MAT13PRBWW

When requesting service or ordering parts, always provide the following information:

- **Product Type**
- **Part Number**
- **Model Number**
- **Part Description**

MAYTAG®

©2005 Maytag Services

Section: CONTROL PANEL

Model: MAT13PRBWW

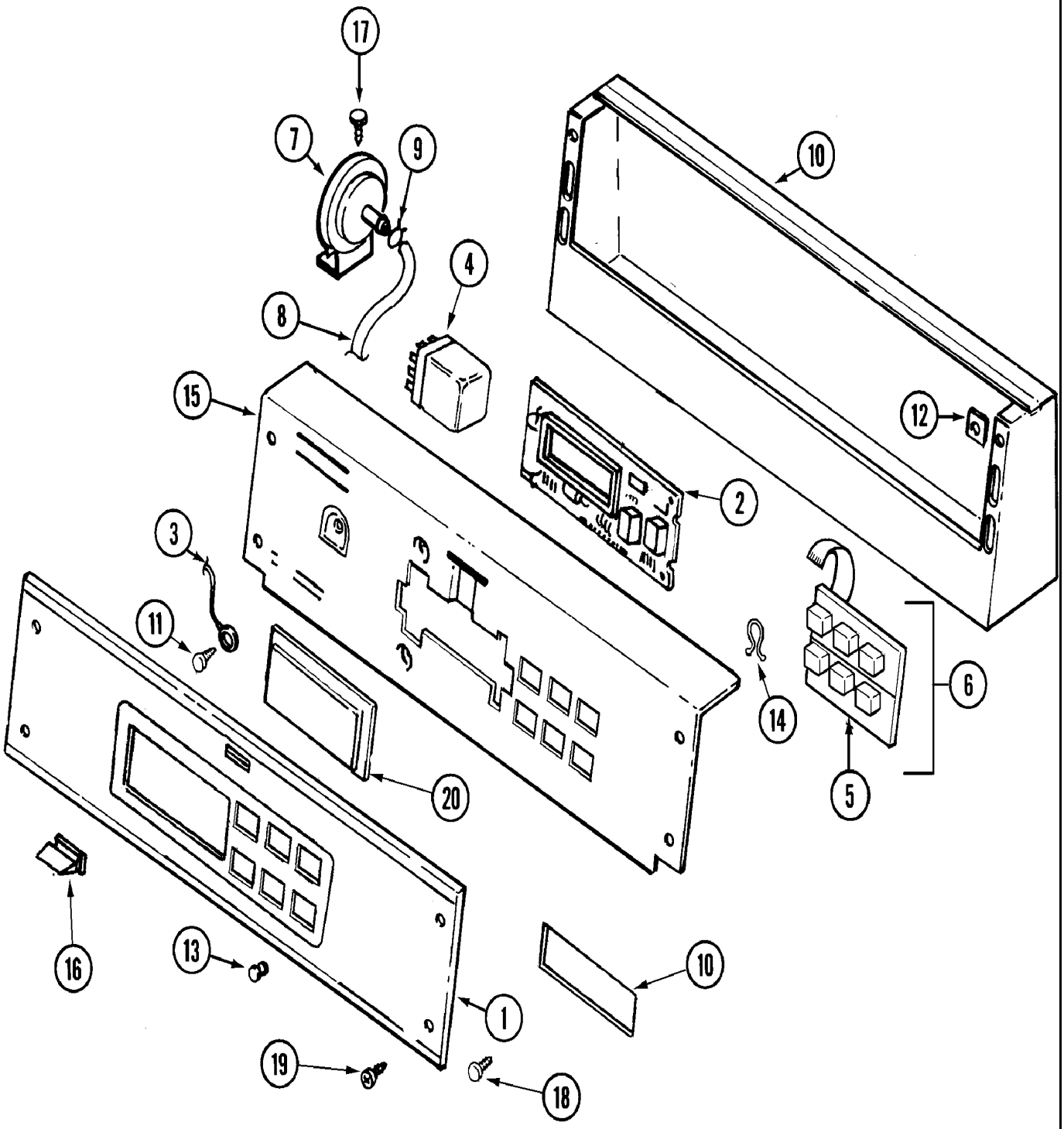

CW11-51

Section: CONTROL PANEL

No.	Part No.	Description	Series	Qty
-	313588	SCREW Note: SCREW, CONTROL PANEL (BACK)	10	2
1	22001949	PANEL, CONTROL (W/LENS)	10	1
2	22002731	BOARD, CONTROL	10	1
-	33001204	STANDOFF, CIRCUIT BOARD	10	2
3	901220	WIRE, GROUND Note: WIRE, GROUND	10	1
4	206421	RELAY-MOTOR REVERSING	10	4
-	22001866	SCREW, RELAY	10	2
5	215517	PUSHBUTTON Note: PUSHBUTTON, CONTROL SWITCH	10	1
6	206808	CONTROL SWITCH ASSY.	10	1
7	203263	SWITCH, WATER LEVEL Note: SWITCH, WATER LEVEL	10	1
8	22001619	TUBE, AIR Note: TUBE, WATER LEVEL SWITCH	10	1
9	22003295	CLAMP, HOSE DOUBLE WIRE Note: CLAMP, WATER LEVEL TUBE	10	1
10	22001976	BEZEL	10	1
11	210186	SCREW, GROUND WIRE TO BASE--NA	10	1
12	215003	FASTENER Note: FASTENER, CONTROL PANEL	10	3
13	215564	LENS, INDICATOR (AMBER) Note: LENS, INDICATOR (AMBER)	10	5
14	22003298	RETAINER, WIRE	10	1
15	22001975	BRACKET, BACK (WHT)	10	1
16	214610	BUMPER, LID	10	1
17	211294	SCREW Note: SCREW, WATER LEVEL SWITCH	10	2
18	215506	SCREW, TORX	10	2
19	215527	SCREW Note: SCREW, CONTROL PANEL (FRT)	10	4
20	22001962	COVER, DISPLAY	10	1
-	33001856	READER HARNESS KIT (16")	10	1
-	22001973	HARNESS, PR SERVICE	10	1
- N	16010747	INSTALLATION INSTRUCTION	10	1

*Color Code (-)=Not Shown #=Series, Serial Prefix or Run No., N=Not Available

Model: MAT13PRBWW

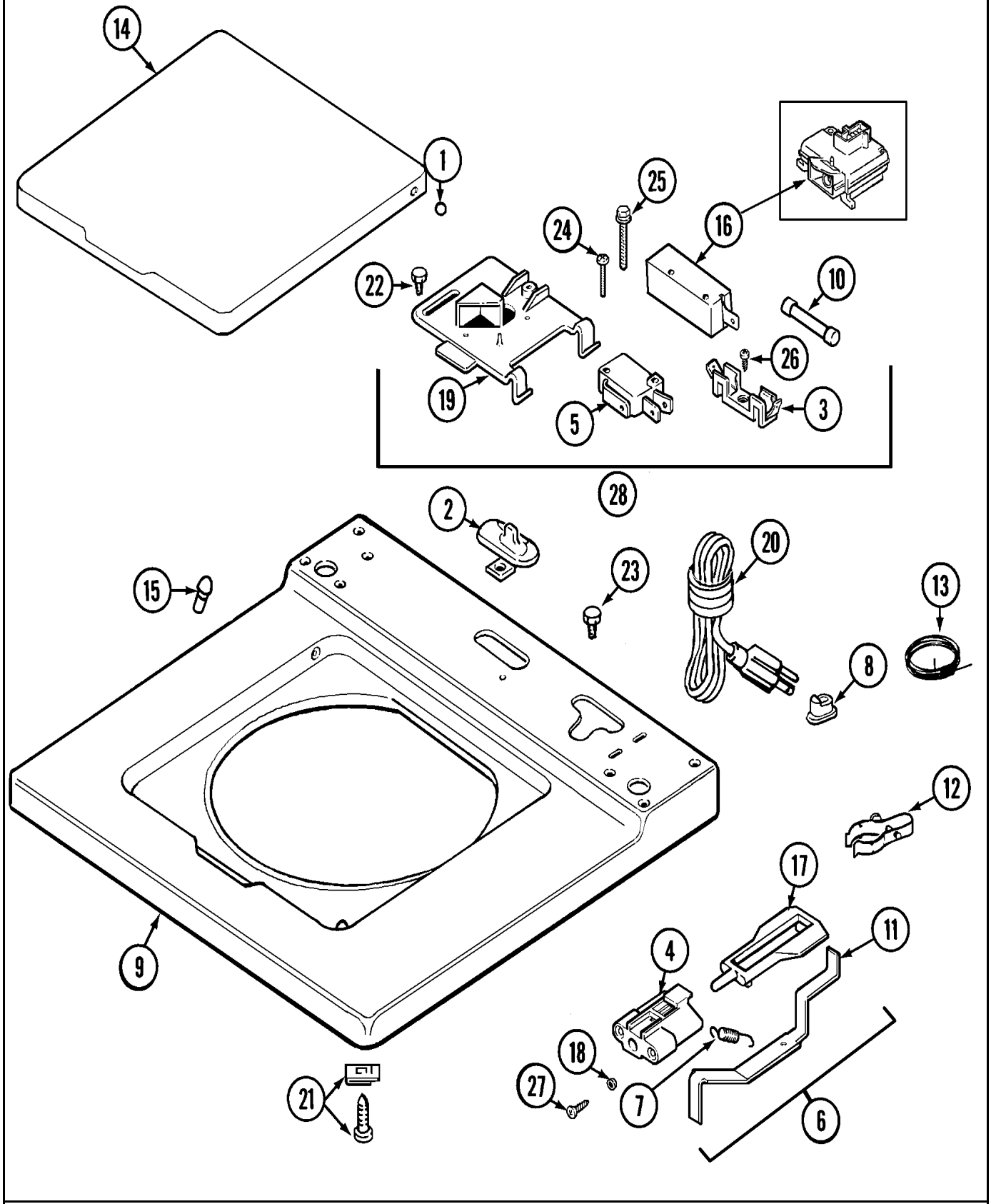

CW13-12

Section: TOP

No.	Part No.	Description	Series	Qty
1	211726	HINGE, BALL	10	1
-	22002925	SCREW Note: SCREW, CAP	10	1
2	22001298	CAP, TOP COVER	10	1
3	207167	BLOCK, FUSE	10	1
4	22002135	BRACKET, UNBALANCE	10	1
5	207166	SWITCH, CHECK	10	1
6	22001969	UNBALANCE LEVER ASSEMBLY Note: LEVER ASSY. (UNBALANCE)	10	1
7	213720	SPRING	10	1
8	211881	GROMMET, CORD	10	1
9	22001679	TOP, MAIN (WHT-NONBLEACH)	10	1
-	22002139	TRANSFORMER (STEP-DOWN COMM)	10	1
10	207168	FUSE	10	1
11	22001968	LEVER, UNBALANCE	10	1
12	301548	CLAMP, GROUND (W/SCREW)	10	1
13	204807	GRND.WIRE,SUPP.PLTE TO TOP CVR Note: GROUND WIRE, SUPPORT PLATE	10	1
-	210186	SCREW, GROUND WIRE TO BASE--NA Note: SCREW, GROUND WIRE	10	1
14	22001893	LID (WHT W/LEGEND) Note: LID (W/LEGEND-WHT)	10	1
15	212716	BUMPER, LID	10	2
16	22003440	SWITCH, LID (120V)	10	1
17	216255	PLUNGER, UNBALANCE Note: PLUNGER, LID SWITCH	10	1
18	211500	WASHER,BRACKE TO TOP COVER Note: WASHER, BRACKER	10	2
19	22001502	FASTENER, U-NUT	10	1
20	22001549	CORD, POWER	10	1
21	204445	SCREW & FASTENER ASY. Note: SCREW & FASTENER ASSEMBLY	10	2
22	207159	SCREW Note: SCREW, BRACKET	10	1
23	210186	SCREW, GROUND WIRE TO BASE--NA Note: SCREW, GROUND WIRE	10	2
24	22001352	SCREW, CHECK SWITCH	10	1
25	213501	SCREW, #6-20 X 1-1/8 INCH Note: SCREW, LID SWITCH	10	1
26	Y311711	SCREW Note: SCREW, FUSE BLOCK	10	1
27	910182	SCREW Note: SCREW, PLUNGER BRACKET	10	2
28	22001682	SWITCH ASSY., LID W/4AMP FUSE	10	1

*Color Code (-)=Not Shown #=Series, Serial Prefix or Run No., N=Not Available

Model: MAT13PRBWW

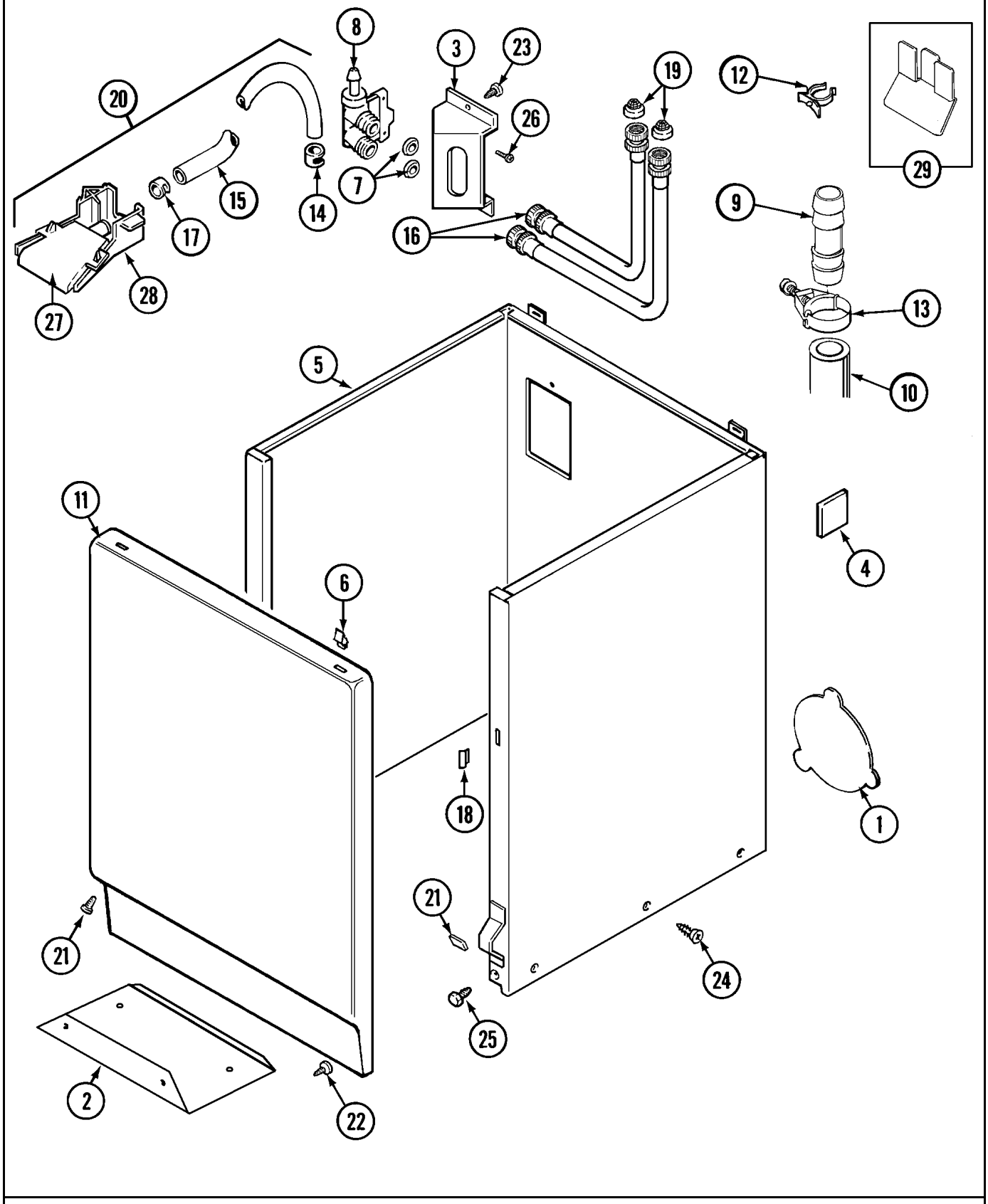

CW12-25

Section: CABINET

No.	Part No.	Description	Series	Qty
-	211294	SCREW Note: SCREW, PLATE	10	2
1	212985	PLATE, ACCESS (W/HOLE)	10	1
1 N	211878	PLATE, ACCESS	10	1
2	213846	GUARD, BELT	10	1
3	22002361	BRACKET, VALVE	10	1
4	215058	PAD, CABINET BUMPER	10	2
-	22002382	FASTENER, V-BRACKET	10	4
-	22001995	SCREW Note: SCREW, V-BRACKET	10	4
5	22002379	CABINET (WHT)	10	1
-	22002381	V-BRACKET	10	2
6	22001650	FASTENER, SPRING	10	2
7	Y013783	GASKET, INLET HOSE Note: WASHER, INLET HOSE	10	2
8	22001275	VALVE, WATER	10	1
-	214337	SCREEN, VALVE	10	1
9	Y216015	HOSE COUPLING Note: COUPLING, HOSE	10	1
-	22002701	RETAINER, DRAIN HOSE	10	1
10	22002700	HOSE, DRAIN	10	1
11	22001803	PANEL, FRONT (WHT)	10	1
12	22002765	CLIP, HOSE	10	2
13	22001640	CLAMP, HOSE Note: CLAMP, HOSE	10	2
14	22001608	INJECTOR HOSE & BACKFLOW ASSY.	10	1
15	22001900	PREVENTER, BACK FLOW	10	1
16	205828	HOSE, INLET ASSY. Note: INLET HOSE ASSEMBLY	10	2
17	22001972	CLIP, CABINET	10	1
18	22002331	SPACER Note: SPACER, FRONT PANEL	10	1
19	200961	SCREEN WASHER, INLET HOSE	10	1
20	22001304	INJECTOR ASSY., WATER Note: WATER INJECTOR ASSEMBLY	10	1
21	22001496	SCREW, TORX Note: SCREW, FRONT PANEL	10	2
22	211294	SCREW Note: SCREW, BELT GUARD	10	3
23	212276	SCREW Note: SCREW, VALVE BRACKET	10	1
24	213007	SCREW, CABINET	10	6
25	213122	SCREW,CBNT.TO FRNT OF BASE--NA Note: SCREW, CABINET	10	2
25	213121	SCREW Note: SCREW, CABINET	10	3
26 N	313561	SCREW----NA Note: SCREW, WATER VALVE BRACKETASSY	10	2
27	22001187	INJECTOR (UPR)	10	1
28	22001186	INJECTOR (LWR)	10	1

*Color Code (-)=Not Shown #=Series, Serial Prefix or Run No., N=Not Available

Model: MAT13PRBWW

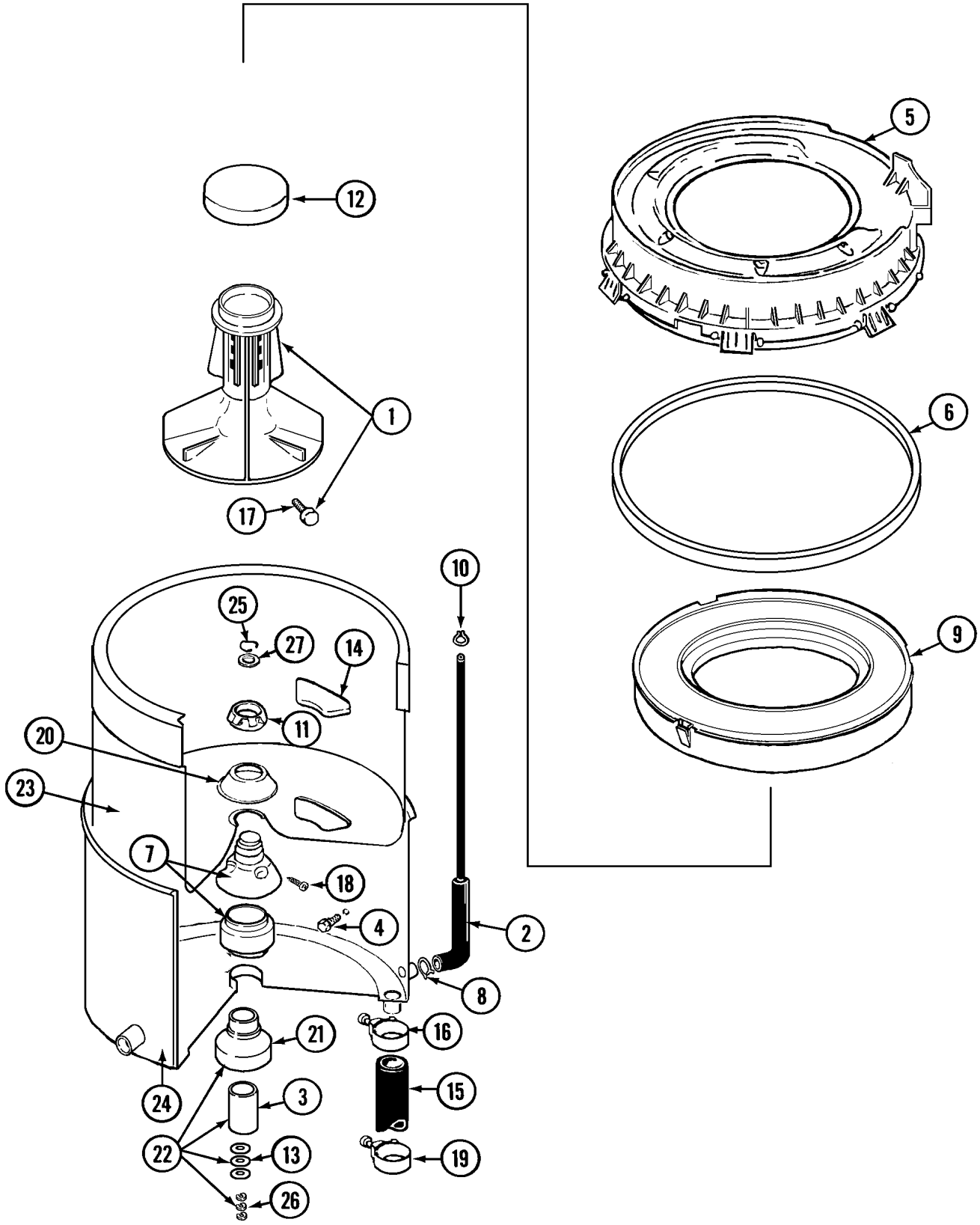

CW17-5

Section: TUB

No.	Part No.	Description	Series	Qty
1	207228	AGITATOR W/LOCK SCREW Note: AGITATOR (W/LOCK SCREW)	10	1
2	22001619	TUBE, AIR Note: TUBE, WATER LEVEL SWITCH	10	1
3	211130	LINER, TUB BEARING	10	1
4	205254	BOLT & GASKET ASSEMBLY (LONG) Note: BOLT & GASKET ASSEMBLY (LONG)	10	2
4	200744	BOLT & GASKET ASSY.(SHORT) Note: BOLT & GASKET ASSEMBLY (SHORT)	10	1
5	22001606	COVER ASSY., TUB	10	1
6	22001007	GASKET Note: GASKET, COVER TO TUB	10	1
7	22001648	MOUNTING STEM AND SEAL KIT	10	1
8	211641	CLAMP, 1-1/16" Note: CLAMP (1-1/16")	10	1
9	22001142	RING, BALANCE (W/CONCRETE) Note: RING, BALANCE (W/CONCRETE)	10	1
10	22003295	CLAMP, HOSE DOUBLE WIRE Note: CLAMP, WATER LEVEL TUBE	10	1
11	211047	NUT, CLAMPING (INNER TUB) Note: NUT, CLAMPING	10	1
-	22001294	CUP, DISPENSING	38	1
-	22001295	HOUSING, DISPENSER	38	1
12	216251	CAP, AGITATOR (WHT)	10	1
13	211100	WASHER, CUSHION	10	3
14	215980	PLUG, FILTER HOLE Note: PLUG, TUB	10	2
15	213045	DRAIN HOSE-TUB TO PUMP Note: HOSE, OUTER TUB	10	1
16	22001640	CLAMP, HOSE Note: CLAMP, HOSE	10	1
17	206478	SCREW & WASHER FOR AGITATOR Note: SCREW & WASHER ASSEMBLY	10	1
18	211618	SET SCREW, MTG. STEM Note: SET SCREW, MOUNTING STEM	10	1
19	202574	CLAMP, HOSE Note: CLAMP, TUB HOSE	10	1
20	211210	WASHER,CLAMPING NUT(STAINLESS) Note: WASHER, CLAMPING NUT	10	1
21	200824	BEARING, TUB	10	1
22	204013	TUB BEARING REPAIR KIT	10	1
23	22001139	TUB, INNER (EX. LARGE)	10	1
24	22003604	TUB, OUTER (XL) AS PKD Note: TUB, OUTER	10	1
26	Y054867	WASHER, LOCK Note: WASHER, RETAINING	10	1

*Color Code (-)=Not Shown #=Series, Serial Prefix or Run No., N=Not Available

Model: MAT13PRBWW

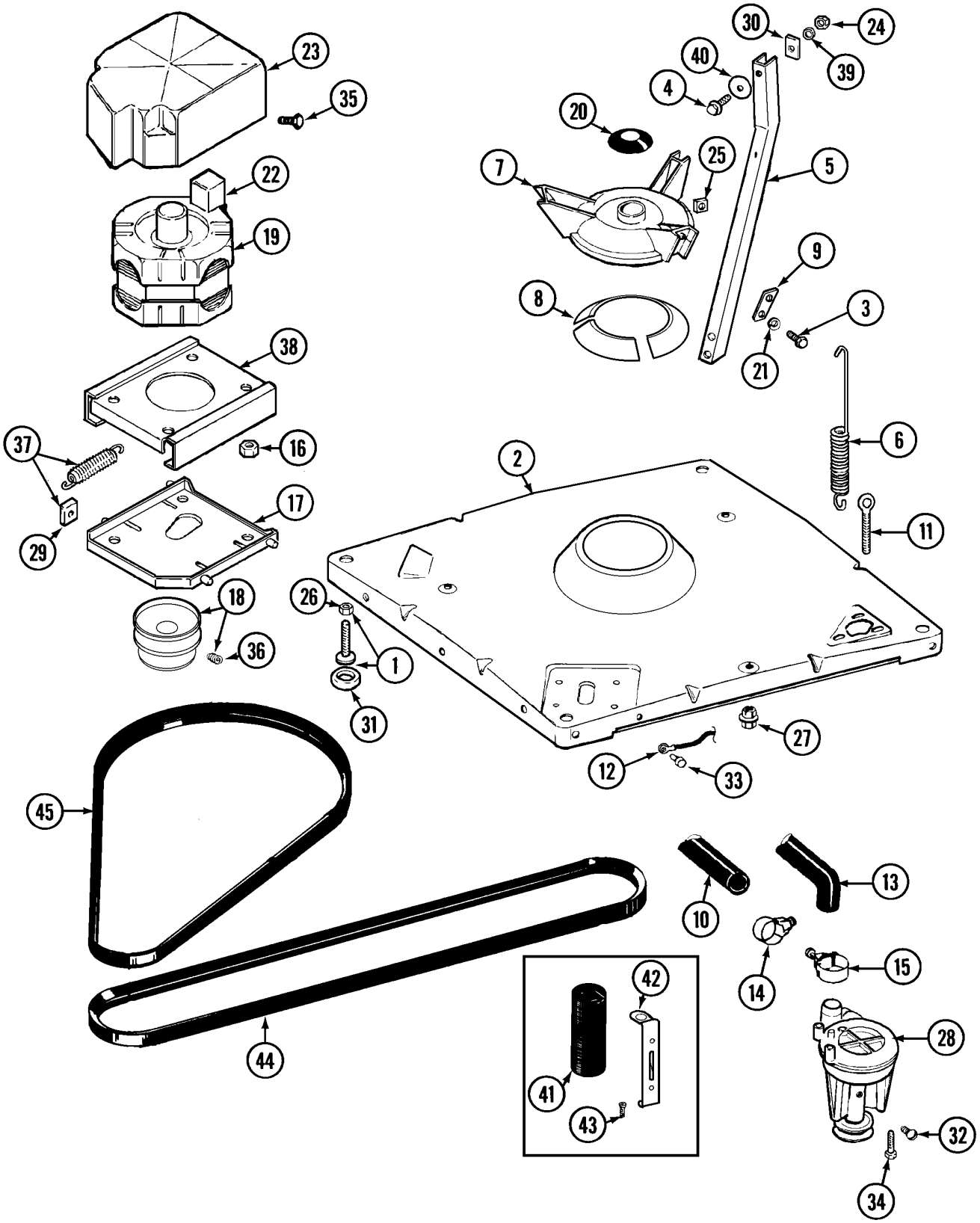

LW10-13

Section: BASE

No.	Part No.	Description	Series	Qty
1	22003428	LEG, ADJUSTABLE (W/NUT)	10	1
2	22002150	BASE (W/DAMPER PADS)	10	1
3	Y015627	SCREW, HEX HD CAP 5/16 X 5/8	10	6
4	205254	BOLT & GASKET ASSEMBLY (LONG) Note: BOLT & GASKET ASSEMBLY (LONG)	10	2
4	200744	BOLT & GASKET ASSY.(SHORT) Note: BOLT & GASKET ASSEMBLY (SHORT)	10	1
5	213053	BRACE, TUB	10	3
6	22001300	SPRING, CENTERING	10	3
7	203725	DAMPER W/BOLT & CLIP Note: DAMPER (W/BOLT & CLIP)	10	1
8	203956	DAMPER PAD KIT (W/POLY LUBE)	10	1
9	213073	WASHER, DOUBLE Note: WASHER, DOUBLE	10	3
10	22001816	HOSE, DRAIN	10	1
11	216416	BOLT, EYE/CENTERING SPRING	10	3
12	901220	WIRE, GROUND Note: WIRE, GROUND	10	1
13	213045	DRAIN HOSE-TUB TO PUMP Note: HOSE, OUTER TUB	10	1
14	22001640	CLAMP, HOSE	10	1
15	22001640	CLAMP, HOSE	10	1
16	311426	NUT, WASHERED LOCK Note: NUT, MOTOR BASE	10	3
17	22001301	MOUNT, MOTOR LOWER-ASSEMBLY Note: PLATE, MOTOR MOUNT (LWR)	10	1
18	200816	PULLEY, MOTOR (W/SET SCREW)	10	1
19	201805	MOTOR (ONE SPEED)	10	1
20	22001586	DEFLECTOR, WATER Note: DEFLECTOR, WATER	10	1
21	911852	WASHER, LOCK (BRACE) Note: WASHER, LOCK	10	6
22	205132	SWITCH, MOTOR START Note: SWITCH, MOTOR EXTERNAL START (PROD. # 201664-14, 205463-4 201800-4)	10	1
23	215098	SHIELD, MOTOR	10	1
24	Y052734	NUT Note: NUT, BRACE (TUB)	10	3
25	Y052785	NUT,BRACE TO DAMPER Note: NUT, BRACE (DAMPER)	10	6
26 N	22003608	NUT, LOCK	10	4
27	211949	NUT, EYEBOLT	10	3
28	202203	PUMP AS PAK Note: PUMP, ASSEMBLY	10	1
29	204998	GLIDE KIT (4 W/POLY LUBE)	10	1
30	212979	WASHER, TUB BRACE	10	3
31	210684	FOOT, RUBBER	10	4
32	22003235	SCREW, BEARING INSERT (HEX)	10	1
33	210186	SCREW, GROUND WIRE TO BASE--NA Note: SCREW, GROUND WIRE	10	1
34	211880	SCREW, HEX HD #10 X 1/2 INC Note: SCREW, PUMP	10	3
35	213121	SCREW Note: SCREW, MOTOR SHIELD	10	1
36	Y053241	SET SCREW, PULLEY Note: SET SCREW, MOTOR PULLEY	10	1
37	205000	GLIDE & SPRING KIT	10	1
38	214956	MOUNT, MOTOR/UPPER Note: PLATE, MOTOR MOUNT (UPPER)	10	1
39	Y054867	WASHER, LOCK Note: WASHER, LOCK	10	3
40	211100	WASHER, CUSHION Note: WASHER, CUSHION	10	3
44	211124	V BELT, PUMP	10	1
45	211125	V BELT,DRIVE PULLEY Note: V BELT, DRIVE PULLEY	10	1

*Color Code (-)=Not Shown #=Series, Serial Prefix or Run No., N=Not Available

Model: MAT13PRBWW

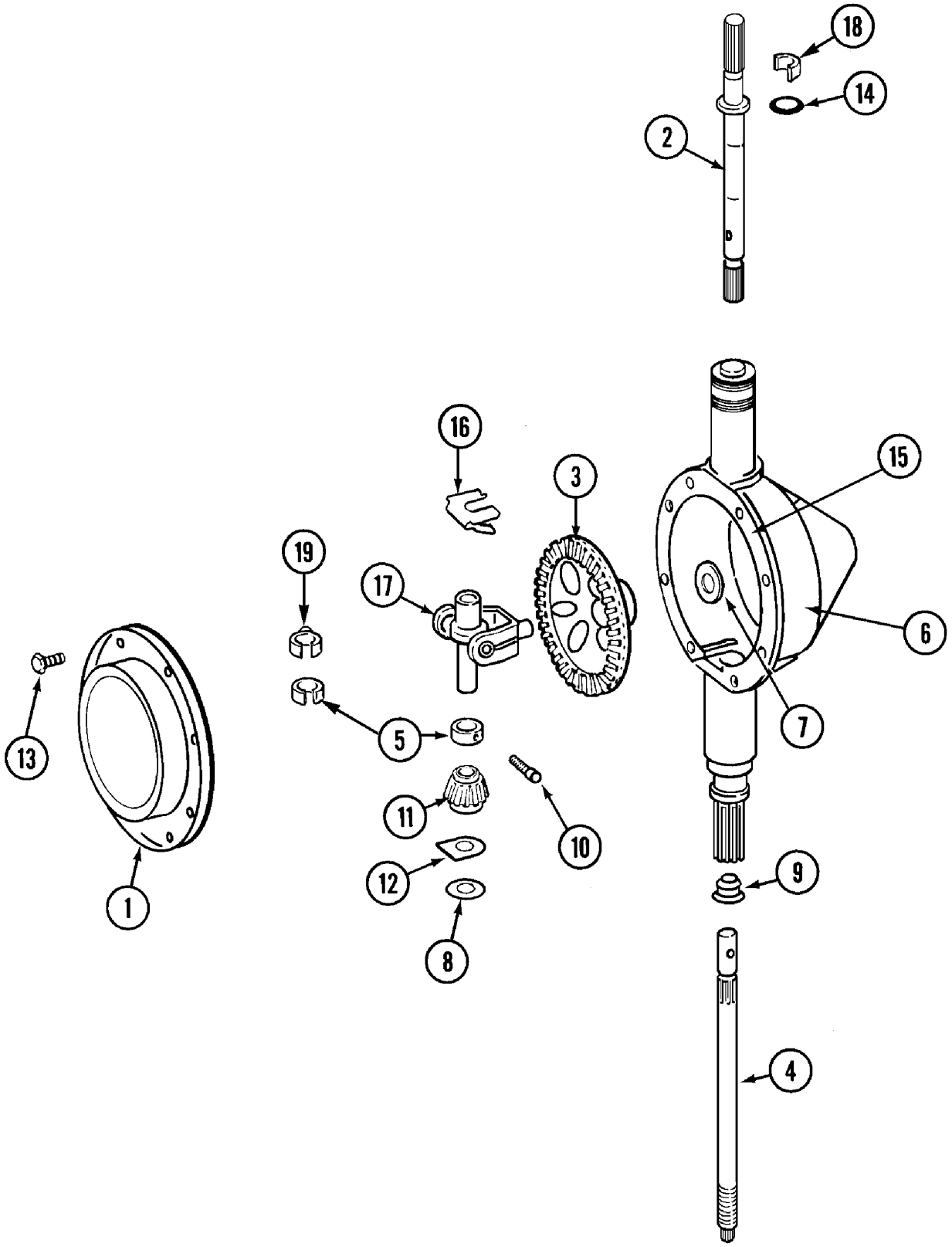

LW15-30

Section: TRANSMISSION

No.	Part No.	Description	Series	Qty
1	206628	COVER, TRANSMISSION	10	1
2	22002415	SHAFT, AGITATOR	10	1
3	206713	GEAR, BEVEL	10	1
4	22002342	SHAFT, CENTER (DEEP TUB)	10	1
5	22002353	COLLAR, CENTER SHAFT	10	1
-	056080	TRANS LUBE - AUTO, 34 OZ.	10	1
6	22002416	ASSEMBLY, CASE CASTING DEEP	10	1
7	215394	WASHER, BEVEL GEAR	10	1
8	211483	WASHER, SPLINED	10	1
9	206602	SEAL, LIP (CENTER SHAFT)	10	1
10	22002126	TRANS (DEEP TUB, COMPLETE)	10	1
11	215401	PINION	10	1
12	215395	PLATE, CLUTCH	10	1
13	215417	SCREW, TRANSMISSION COVER	10	4
14	22002417	O-RING AGITATOR SHAFT	10	1
15	Y058700	SILASTIC,ADH.SEALANT Note: SILASTIC, ADHESIVE SEALANT	10	1
16	22002341	COLLAR, LOWER PLASTIC KEEPER	10	1
17	206685	BLOCK, TORQUE AND YOKE ASSEMBL	10	1
18	22002340	COLLAR, AGITATOR SHAFT	10	1
19	22002341	COLLAR, LOWER PLASTIC KEEPER	10	1

*Color Code (-)=Not Shown #=Series, Serial Prefix or Run No., N=Not Available

Model: MAT13PRBWW

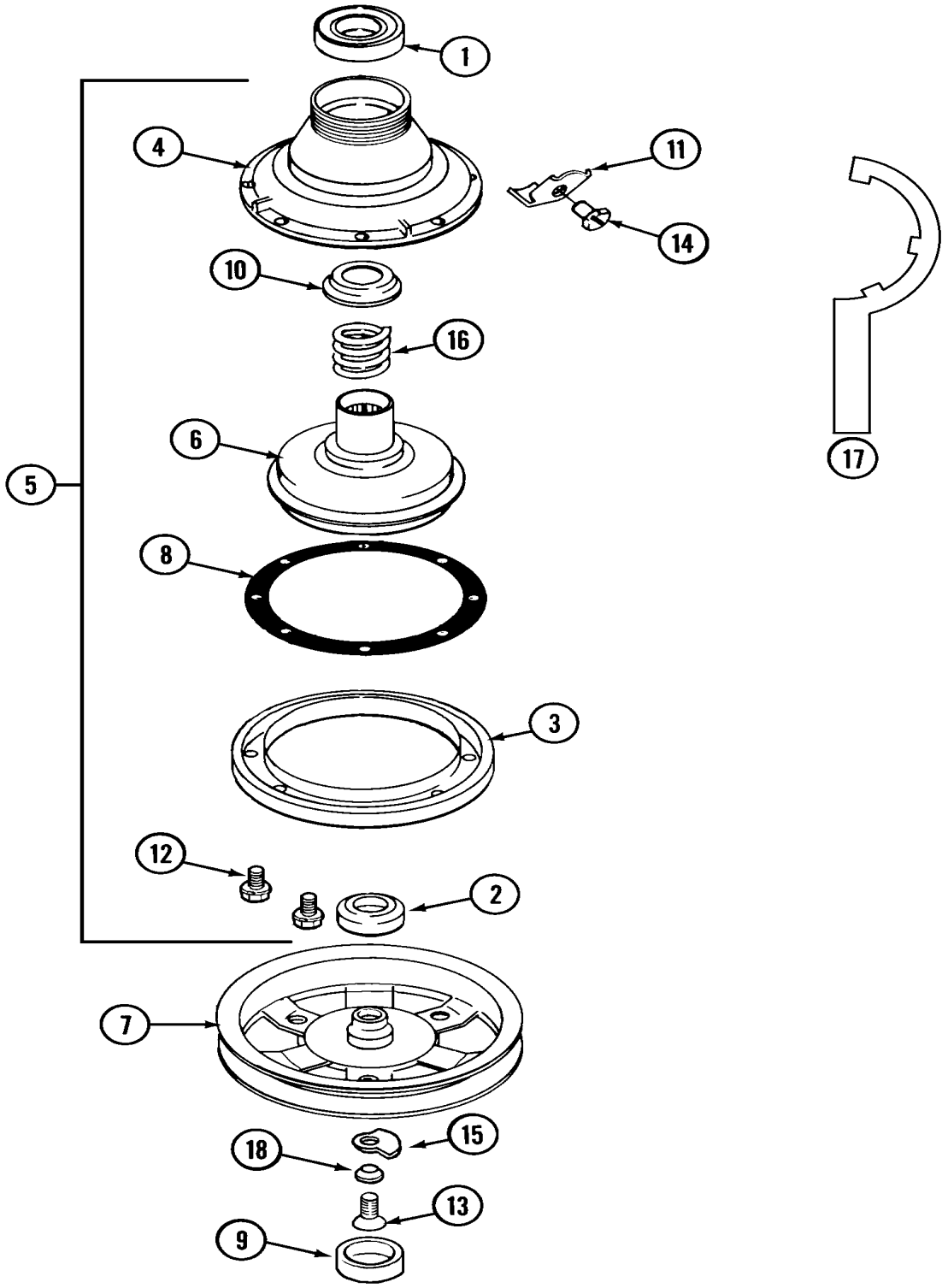

LW15-15

Section: CLUTCH, BRAKE & BELTS

No.	Part No.	Description	Series	Qty
1	200720	BALL BEARING, RADIAL	10	1
2	200835	BEARING, BRAKE ROTOR	10	1
3	211043	DRUM, BRAKE Note: DRUM, BRAKE (INC:ROTOR,RETAINER,SPRING,DRMSUPPORT,STRATOR,GASKET,HOUSING	10	1
4	211045	HOUSING, BRAKE	10	1
5	201190	BRAKE ASSEMBLY	10	1
6	201126	ROTOR, BRAKE (W/FACING)	10	1
7	22002431	PULLEY ASSEMBLY	10	1
8	211042	GASKET, BRAKE DRUM	10	8
9	22002428	COVER, DUST (PLASTIC)	10	1
10	211039	RETAINER, BRAKE SPRING	10	1
11	213325	CLIP, RETAINER Note: BOLT, RETAINING CLIP	10	1
12	211000	SCREW,HEX HEAD (BRAKE DRUM)	10	1
13	211375	SCREW,STOP LUG(CENTER SHAFT)	10	1
14	213326	SCREW, RETAINING CLIP	01	1
15	211089	LUG, STOP	10	1
16	211041	SPRING, BRAKE	10	1
17	Y038315	TOOL, BRAKE PKG ASSY	10	1
18	22003555	WASHER, STOP LUG	10	1

*Color Code (-)=Not Shown #=Series, Serial Prefix or Run No., N=Not Available

Model: MAT13PRBWW

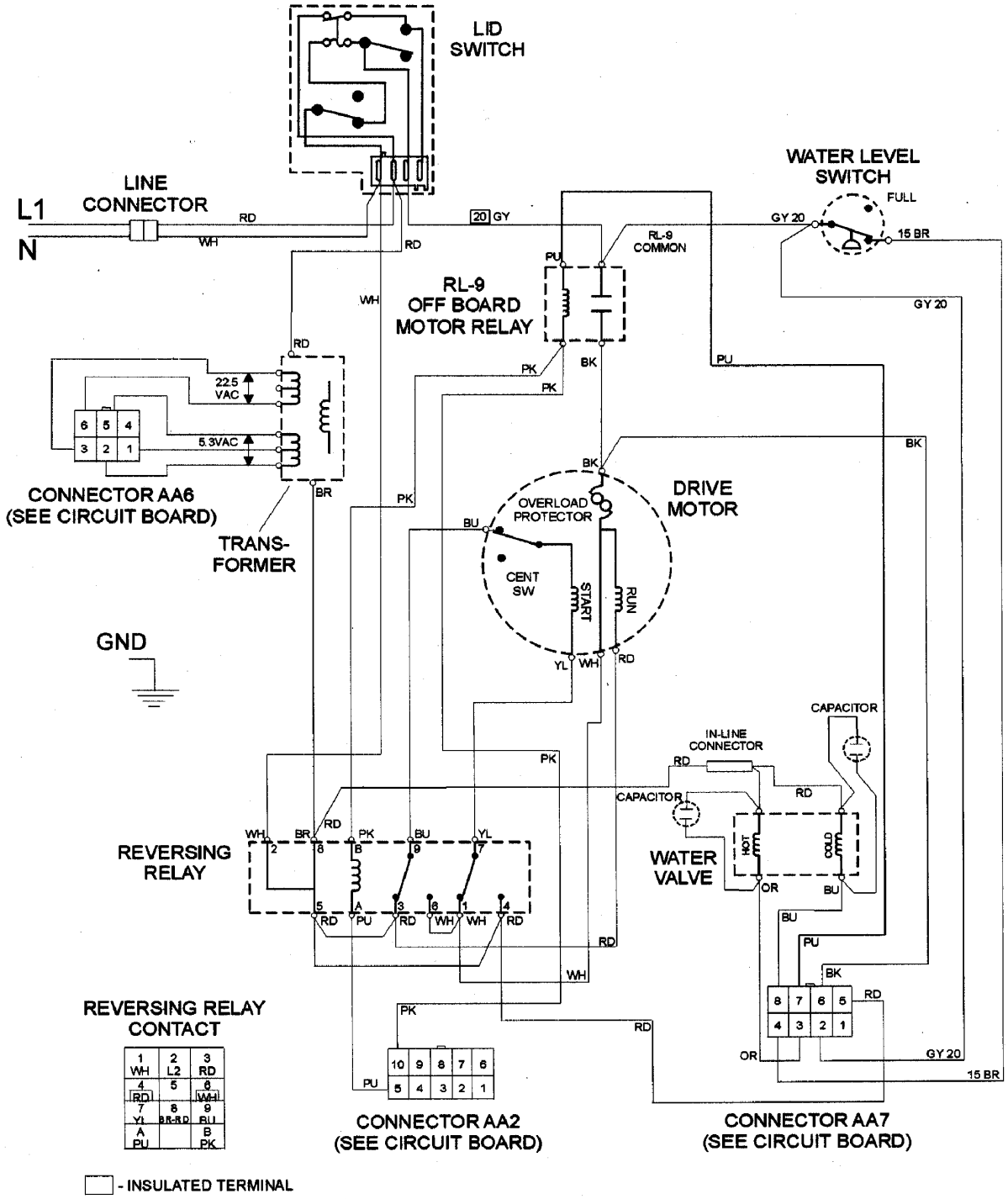

15002840